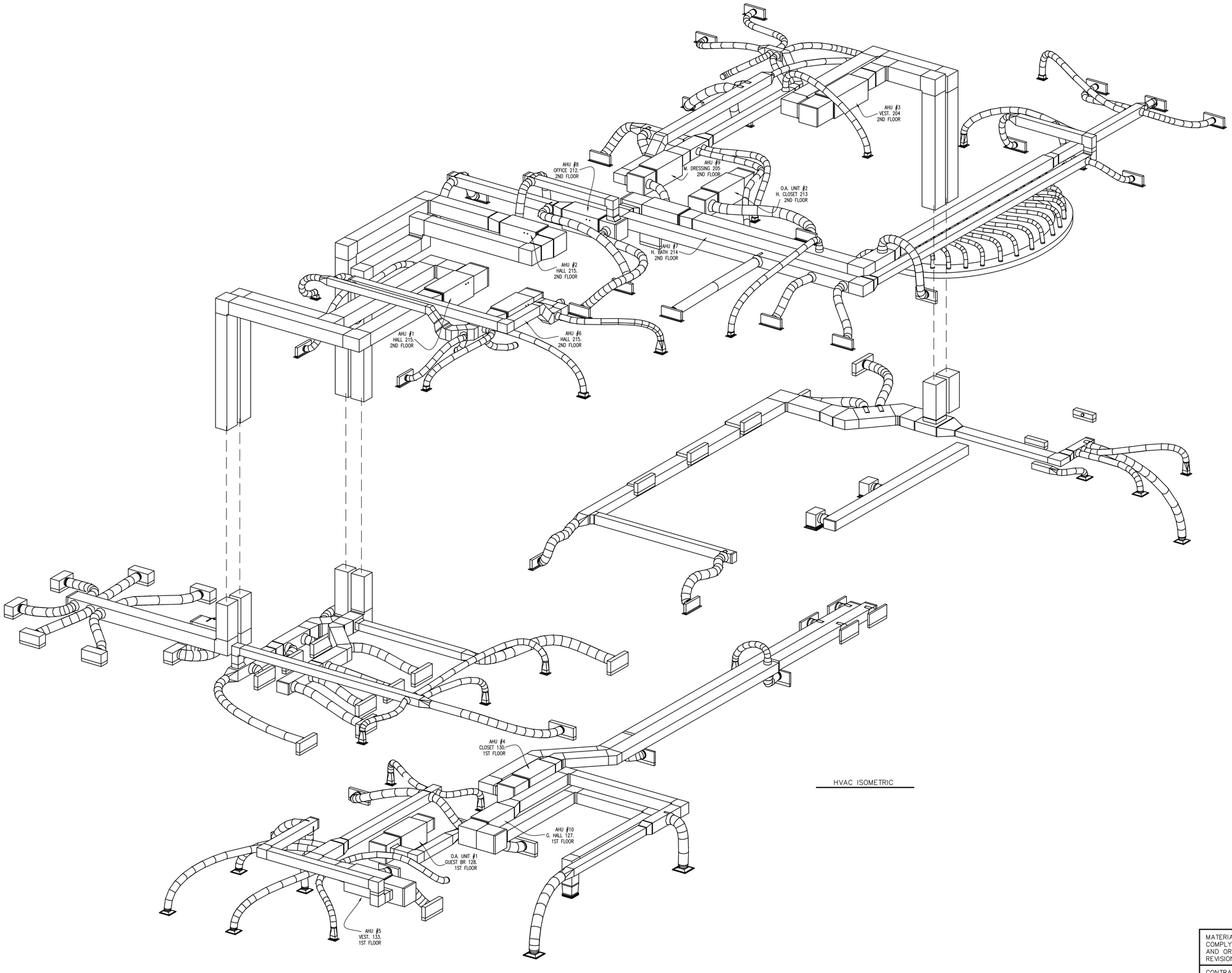

HVAC ISOMETRIC

MATERIALS AND WORKMANSHIP SHALL COMPLY WITH ALL APPLICABLE CODES AND ORDINANCES IN THEIR LATEST REVISIONS.

CONTRACTOR TO COORDINATE SPECIFIC REQUIREMENTS OF EQUIPMENT WITH MANUFACTURERS' SHOP DRAWINGS.

ALL EQUIPMENT SHALL BE INSTALLED STRICTLY IN ACCORDANCE WITH THE MANUFACTURERS WRITTEN INSTALLATION INSTRUCTIONS.

REVISIONS	BY

OWNERSHIP AND USE OF THESE DRAWINGS, PLANS, REPORTS AND SPECIFICATIONS AS INSTRUMENTS OF SERVICE ARE AND SHALL REMAIN THE PROPERTY OF RGD & ASSOCIATES INC. WHETHER THE PROJECT THEY ARE MADE FOR IS EXECUTED OR NOT. THEY SHALL NOT BE USED BY THE OWNER ON OTHER PROJECTS, FOR ADDITIONS TO THIS PROJECT, OR FOR COMPLETION OF THIS PROJECT BY OTHERS, EXCEPT BY AGREEMENT IN WRITING AND WITH APPROPRIATE COMPENSATION TO THE ENGINEERS.

RGD & ASSOCIATES INC.
Consulting Engineers
1003 Jupiter Park Lane, Suite 2, Jupiter, Florida 33458

CONSTRUCTION DOCUMENTS FOR:

RGD EXAMPLE PROJECT

ANYPLACE

ANYTOWN, FLORIDA

ROBERT DAVENPORT P.E.
FLORIDA P.E. NO. 31932
CERTIFIED MEMBER
MECHANICAL ENGINEER

DATE:

Date: DATE

Scale:

Drawn:

Checked: RGD

Job# XX-XXXX

Sheet

M-2.3

Of Sheet